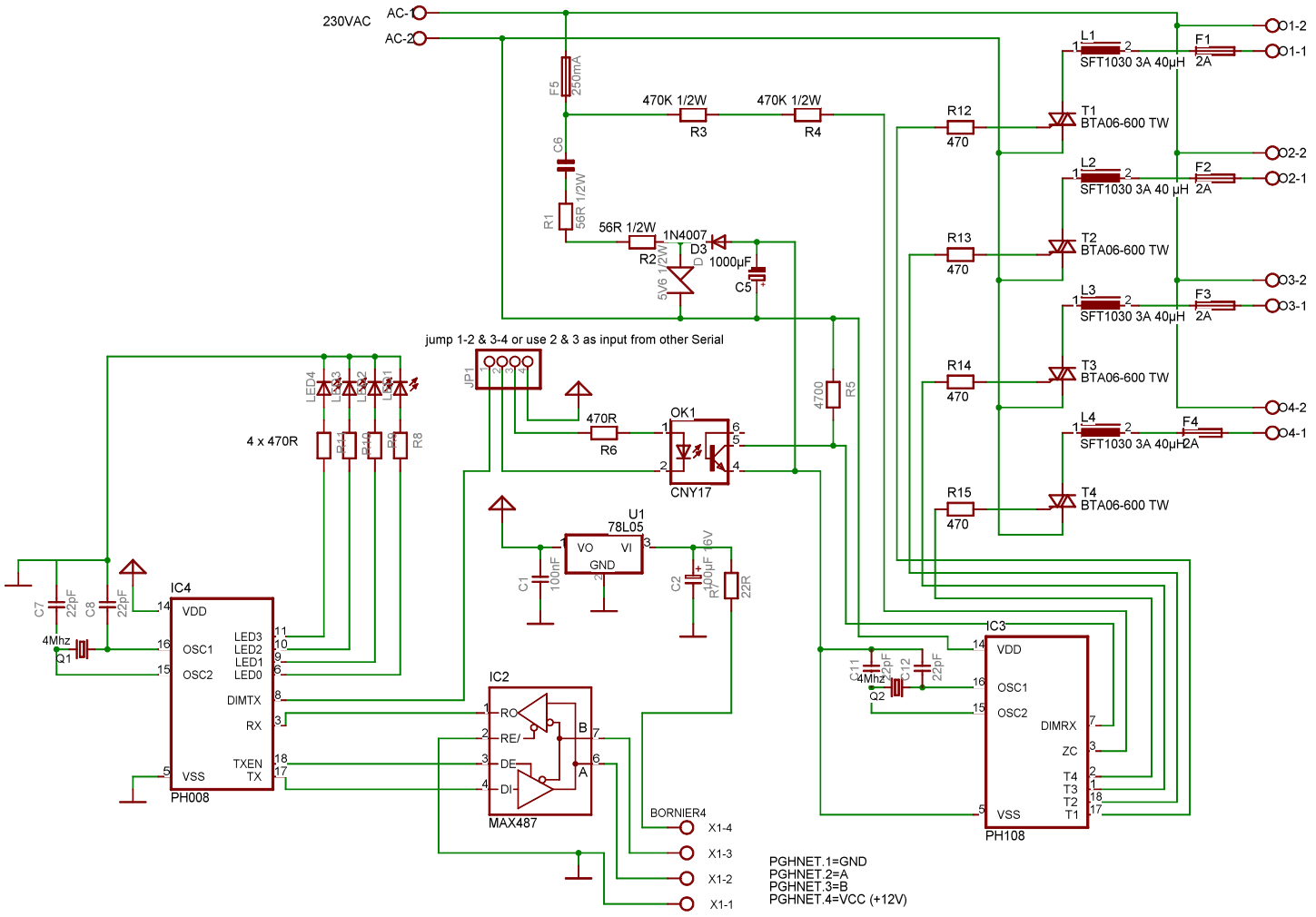

TITLE: dimmerV2	
Document Number:	REV:
Date: 21/01/2007 00:03:25	Sheet: 1/1